REFERENCE DOCUMENTS

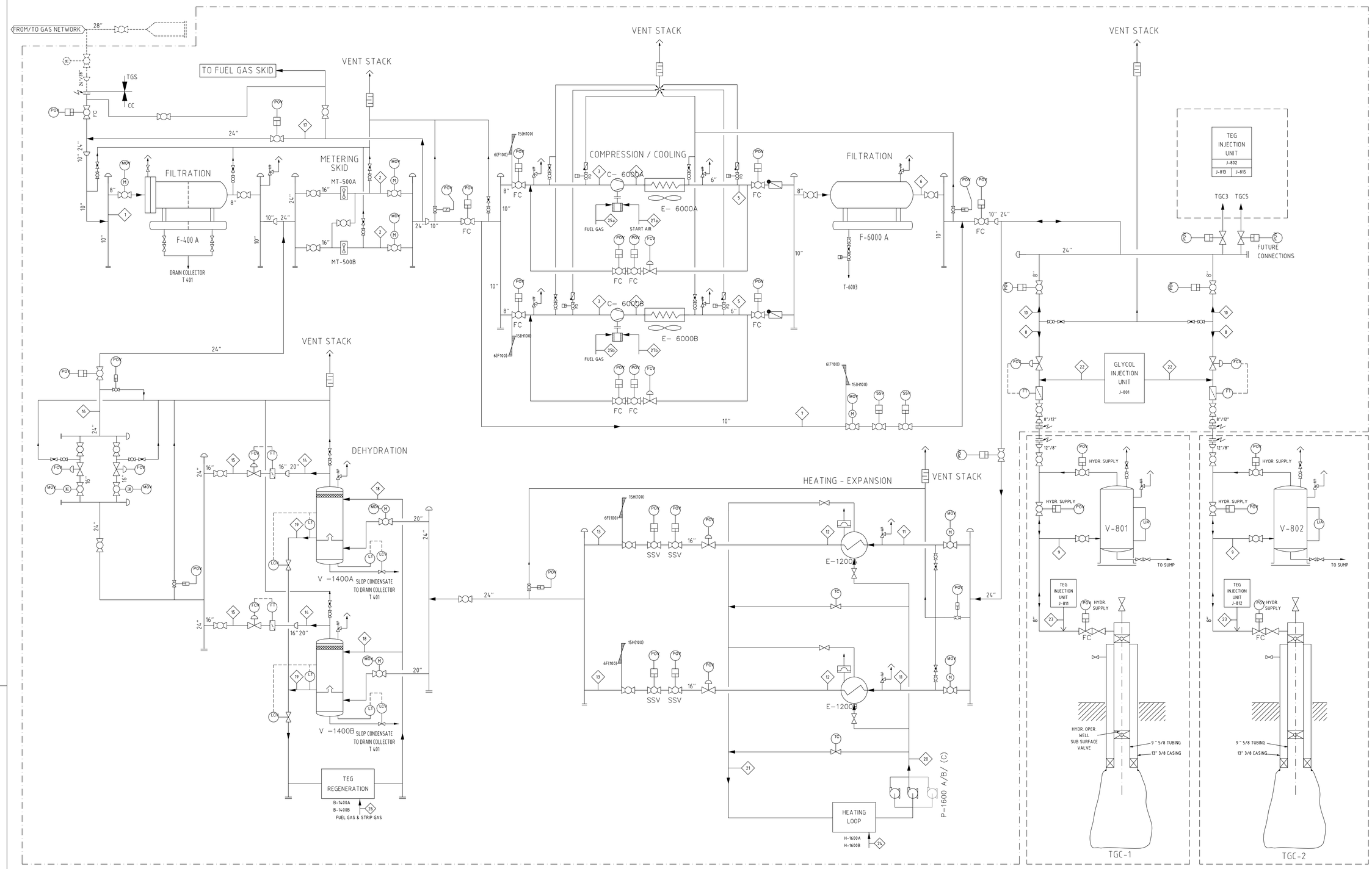

MATERIAL AND ENERGY BALANCE

STREAM No.		1	2	3	4	5	6	7	8	9	10	11	12	13	14	15	16	17	18	19	20	21	22	23	24	25=26	26	27=28
FLUID		NAT.GAS	NAT.GAS	NAT.GAS	NAT.GAS	NAT.GAS	NAT.GAS	NAT.GAS	NAT.GAS	NAT.GAS	NAT.GAS	NAT.GAS	NAT.GAS	NAT.GAS	NAT.GAS	NAT.GAS	NAT.GAS	NAT.GAS	LEAN TEG	RICH TEG	WATER/GLYC.	WATER/GLYC.	TEG/WATER	TEG/WATER	NAT.GAS	NAT.GAS	NAT.GAS	COMPRESSED
PHASE		GAS	GAS	GAS	GAS	GAS	GAS	GAS	GAS	GAS	GAS	GAS	GAS	GAS	GAS	GAS	GAS	GAS	LIQUID	LIQUID	LIQUID	LIQUID	LIQUID	LIQUID	GAS	GAS	GAS	AIR
INDICATION FROM		GRID	METERING	METERING	COMPRESSION	COOLING	OIL SEP.	METERING	HEADER	CAVERN	KO. DRUM	FIELD PIPES	HEATERS	PRESS. RED.	DEHYDRAT	FLOW CONTROL	PRESS. CONTR.	METERING	TEG REG.	DEHYDRAT	HT.WAT. BOIL	GAS HEATER	INJ. UNIT	INJ. UNIT	FUEL GAS	FUEL GAS	FUEL GAS & STRIP GAS	DRIED
INDICATION TO		FILTRATION	SKID	COMPRESSION	COOLING	OIL SEP.	HEADER	HEADER	CAVERN	KO. DRUM	HEADER	HEATERS	PRESS. RED.	DEHYDRAT	FLOW CONTROL	PRESS. CONTR.	METERING	GRID	DEHYDRAT	TEG REG.	GAS HEATER	HT.WAT. BOIL	GATHERING	WELLHEAD	HT.WAT. BOIL	GAS MOTOR	REGENERATION	GAS MOTOR START
FLOW N (m^3/h)	min.	20,000	20,000	20,000	20,000	20,000	20,000	20,000	10,000	30,000	30,000	30,000	30,000	30,000	30,000	30,000	30,000	30,000	3.64 m^3/h	4001 kg/h	10,000 ltr./h	13,000 ltr./h	20 ltr./h	20 ltr./h	50	50	12	2,500
	max.	100,000	300,000	114,000	114,000	114,000	114,000	114,000	57,500	150,000	150,000	300,000	300,000	300,000	300,000	300,000	600,000	600,000	4.50 m^3/h	6001 kg/h	65,000 ltr./h	65,000 ltr./h	50 ltr./h	50 ltr./h	240	1,300	152	3,000
	design	100,000	300,000	50,000	50,000	50,000	100,000	100,000	50,000	150,000	150,000	300,000	300,000	300,000	300,000	300,000	600,000	600,000	4.50 m^3/h	-	100,000 ltr./h	80,000 ltr./h	50 ltr./h	50 ltr./h	300	1,500	160	3,500
PRESSURE (bar a.)	min.	56.0	56.0	56.0	66.0	66.0	66.0	55.0	66.5	60.0	59	58.5	90(60)	56	56	56	56	56	6	6	2.0	2.0	67	67	3.0	3.0	3.0	18
	max.	85.0	85.0	85.0	186.0	186.0	186.0	84.5	165.5/185.5	186	186	201.0	181(192)	90	90	85	85	85	90	90	3.0	3.0	186	186	5.0	5.0	5.0	20
	mech. design	95.0	95.0	95.0	201.0	186.0/201.0	186.0/201.0	95.0	201.0	201.0	201.0	201.0	201.0	95	95	95	95	95	95	95	6.0	6.0	201.0	201.0	6.0	6.0	6.0	25
	thermodyn. design	56.0	55.5	55.0	66.0/186.0	-	-	-	-	-	-	-	162(190)	90/46	-	85/84	-	-	-	-	-	-	-	-	-	-	-	-
TEMPRERATURE ° C	min.	10	10	10	47	25	25	10	25	9	9	9	15-25	15-25	15-25	10-22	10-20	10-20	20	25	10	10	10	10	10	10	10	10
	max.	25	25	25	149	55	55	25	40	36	36	36	55	36	36	36	36	36	30	36	90	60	40	40	25	25	25	40
	mech. design	60	60	60	150	150	60	60	60	60	60	60	60	60	60	60	60	60	60	60	120	120	60	60	60	60	60	60
	thermodyn. design	-	-	25	47/149	-	-	-	-	-	-	-	-	-	25 - 36	-	-	-	-	-	-	-	-	-	-	-	-	-
MASS FLOW																												
VOLUME FLOW																												
DENSITY (kG/m^3)																												

REV.	DATE	DESCRIPTION	DRAW. BY:	CHK'D BY:	APP'D BY:	CLIENT APP'D
O	15.09.02	Issued for Construction	Jo	Jo	JW	
F	28.11.01	HAZOP – Review	Jo	Jo	Kra	
E	24.01.01	Where indicated △1	Jo	Jo	Kra	
D	20.11.00	Where indicated △1	La	Jo	Kra	
C	29.09.00	General Review	Jo	Wie	Lp	
B	21.08.00	Process data revised	Jo.	Kra	Fr	
A	04.07.00	ISSUED FOR APPROVAL	Jo	Kra	Fr	

Kavernen Bau- und Betriebs-Gmbh · CME · KOCH · ODEBRECHT · SK FUNDIAL, S.A. · SCHOPOL

	DATE	NAME
DRAW.	18.01.00	Assad.
COORD.	18.01.00	Urban
CHECK.	18.01.00	Kra

DRAWING NO. 257-K-130-XP-022 (0)

DEPT. AT

SHEET /

SUPERSEDED BY

SUPERSEDES

KBB Kavernen Bau- und Betriebs-GmbH

Transgás GrupoGDP

PROJECTO DE GÁS NATURAL – PORTUGAL
ARMAZENAGEM SUBTERRÂNEA

GAS FACILITIES
PROCESS FLOW DIAGRAM

SCALE	DOCUMENT NUMBER						
	JOB NO.	PREFIX	AREA	DOC. TYPE	CATEG.	NUMBER	REV.
	P2	U	02522	DWG	PI	1001	0

CAD File: 2D-PIPE \ 257\130XP022

THIS DOCUMENT BELONGS TO TRANSGÁS S.A. All rights reserved.